GR6160-3200

EFORT

Maxium Reach:3240 mm / Wrist / Max Payload:16 kg

Highlights

An economical painting robot, non-explosion-proof structure design;
Orthogonal spherical wrist structure, large load, high stiffness, wide working range;
Default painting application software , built-in I/Os, easy integration, simple programming;
Especially suitable for painting furniture, large tank, board and frame parts;
Non-explosion-proof robot.

Applications

Specially designed for flat workpiece and similar application scenarios: such as wood doors, window frames, pipes, etc;
Also can be used for multi-size regular parts spraying, such as containers.

Industries

Suitable for furniture, logistics and other industries.

EFORT INTELLIGENT EQUIPMENT CO.,LTD.
PHONE: (00 86) 400-052-8877
ADDRESS: No.96 East Wanchun Road, China(Anhui) Pilot Free Trade Zone Wuhu Area, Wuhu, Anhui Province, China
WWW.EFORT.COM.CN

SPECIFICATIONS

Max. Payload on Wrist		16 kg	
Reach		3240 mm	
Repeatability		±0.15 mm	
Motion Range & Maximum Speed		Motion Range	Maximum Speed
	J1	±180°	140°/sec
	J2	+70°/-135°	140°/sec
	J3	+175°/-80°	165°/sec
	J4	±360°	500°/sec
	J5	±120°	350°/sec
	J6	±360°	900°/sec
Allowable Load Moment at Wrist	J4	41 N·m	
	J5	41 N·m	
	J6	23 N·m	
Allowable Load Inertia at Wrist	J4	1.6 kg·m²	
	J5	1.6 kg·m²	
	J6	0.3 kg·m²	

Structure		6-Axis Series Structure
Installation		Floor
Safety Level		EN ISO13849 PLd
IP Grade	Robot	IP 65
	Cabinet	IP 54
Explosion-Proof	China	/
	ATEX-Gas	/
	ATEX-Dust	/
Environment Requirements	Voltage	AC380V(±10%)
	Power Capacity	5.0 kVA
	Temperature	0-45 °C
	Humidity	20-80RH (No Condensation)
Arm Payload	Outer Arm	5 kg
	Inner Arm	5 kg
Weight	Robot	600 kg
	Cabinet	160 kg

OPERATING SPACE

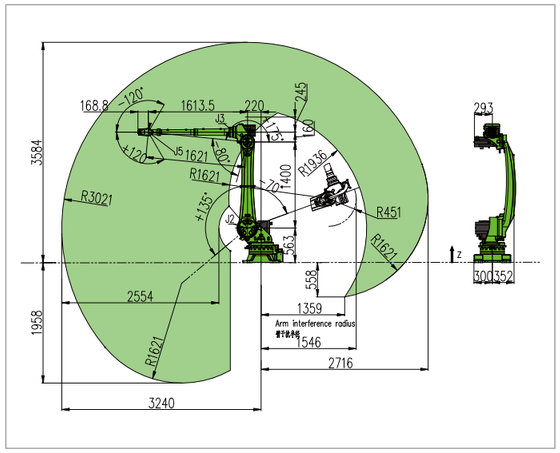

BASE& END FLANGE MOUNTING SIZE

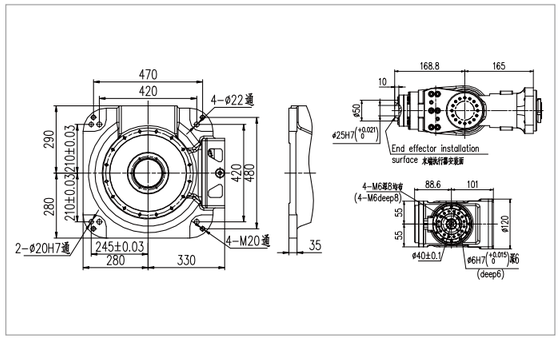

CONTROL CABINET SIZE&WRIST END LOAD MAP

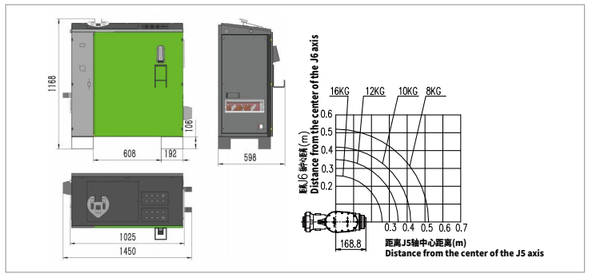

SELECTION&CONFIGURATION TABLE

Item	Standard	Optional	
Driver	6 Axes	6+2~4 Axes	
Connecter Cable	Static	Static	Flexible
	8 m	Max:30 m	
Pendant	10 m	Max:30 m	
DI/DO	12/12	Customized	
Safety DI/DO	/	/	
AI/AO	/	Customized	
Communication Mode	TCP/IP	ProfiBus Slave	ProfiNet Slave
Memory Capacity	1GB	/	
Connecter	USB/TCPIP	/	
Software Package	Painting Package	Visual Programming	
Program Mode	Pendant	Touch Panel	
Color	RAL6018	Customized	

Information Release Time 2023/07