GR6150-2900

EFORT

Maxium Reach:2900 mm / Hollow Wrist / Max Payload:15 kg

Highlights

Large hollow wrist with possibility of paint pipeline arranged in the wrist, convenient integration;
The electric control cabinet complies with EN ISO13849 PLd security level and supports aux axis;
Standard painting application software, built-in I/Os, easy integration, simple programming;
ATEX explosion-proof certification of China and Eu, can be used in zone 1 gas and zone 21 dust dangerous operation environment.

Applications

Specially designed for painting applications in automotive industries: such as BIW, bumpers;
Also can be used for container, engineering vehicles and other large workpiece painting.

Industries

Suitable for automobile and auto parts, tricycle and other industries.

EFORT INTELLIGENT EQUIPMENT CO.,LTD.
PHONE: (00 86) 400-052-8877
ADDRESS: No.96 East Wanchun Road, China(Anhui) Pilot Free Trade Zone Wuhu Area, Wuhu, Anhui Province, China
WWW.EFORT.COM.CN

SPECIFICATIONS

Max. Payload on Wrist		15 kg	
Reach		2900 mm	
Repeatability		±0.2 mm	
Motion Range & Maximum Speed		**Motion Range**	**Maximum Speed**
	J1	±160°	120°/sec
	J2	±135°	120°/sec
	J3	-75°/+250°	120°/sec
	J4	±540°	360°/sec
	J5	±540°	420°/sec
	J6	±540°	530°/sec
Allowable Load Moment at Wrist	**J4**	44.2 N·m	
	J5	28.8 N·m	
	J6	15.1 N·m	
Allowable Load Inertia at Wrist	**J4**	1.17 kg·m²	
	J5	0.87 kg·m²	
	J6	0.15 kg·m²	

Structure		6-Axis Series Structure
Installation		Floor,Upside-down,Wall,Angle mount
Safety Level		EN ISO13849 PLd
IP Grade	**Robot**	IP 65
	Cabinet	IP 54
Explosion-Proof	**China**	Ex ib mb px IIC T4 Gb
	ATEX-Gas	II 2G Ex pxb IIC T4 Gb
	ATEX-Dust	II 2D Ex pxb IIIC T135℃ Db
Environment Requirements	**Voltage**	AC380V(±10%)
	Power Capacity	5.0 kVA
	Temperature	0-45 ℃
	Humidity	20-80RH (No Condensation)
Arm Payload	**Outer Arm**	15 kg
	Inner Arm	15 kg
Weight	**Robot**	640 kg
	Cabinet	160 kg

OPERATING SPACE

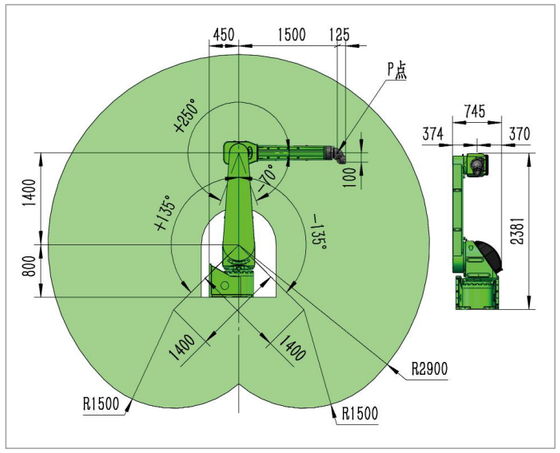

BASE& END FLANGE MOUNTING SIZE

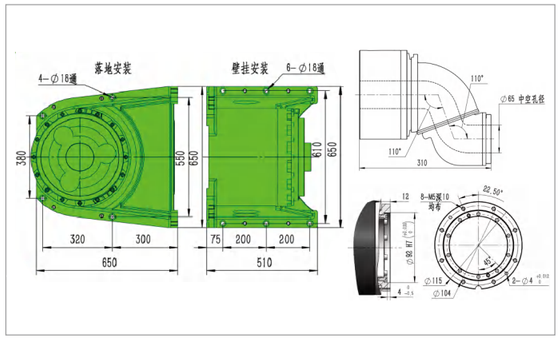

CONTROL CABINET SIZE&WRIST END LOAD MAP

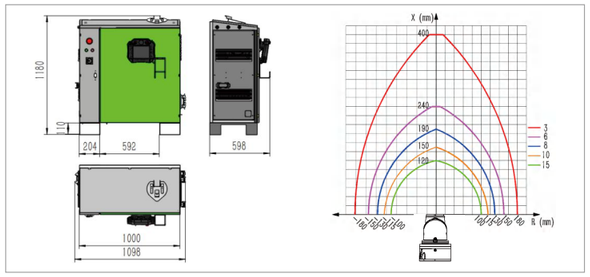

SELECTION&CONFIGURATION TABLE

Item	Standard	Optional	
Driver	6 Axes	6+2~4 Axes	
Connecter Cable	Static	Static	Flexible
	8 m	Max:30 m	
Pendant	10 m	Max:30 m	
DI/DO	12/12	Customized	
Safety DI/DO	8/4	Customized	
AI/AO	/	Customized	
Communication Mode	TCP/IP	ProfiBus Slave	ProfiNet Slave
Memory Capacity	1GB	/	
Connecter	USB/TCPIP	/	
Software Package	Painting Package	Visual Programming	
Program Mode	Pendant	Touch Panel	
Color	RAL6018	Customized	

Information Release Time 2023/07